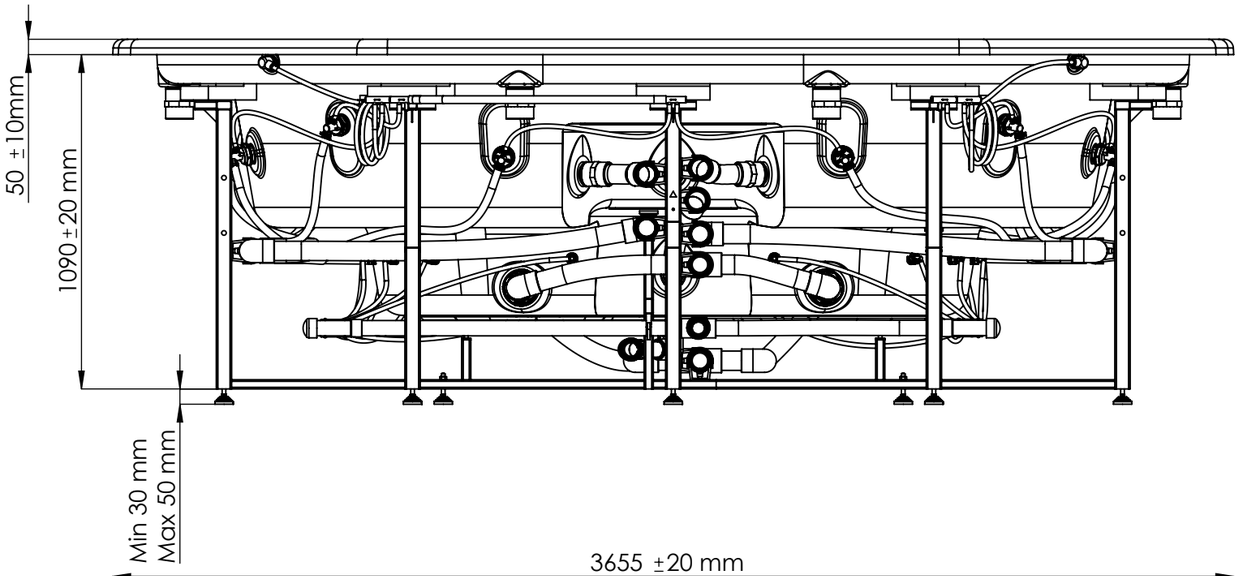

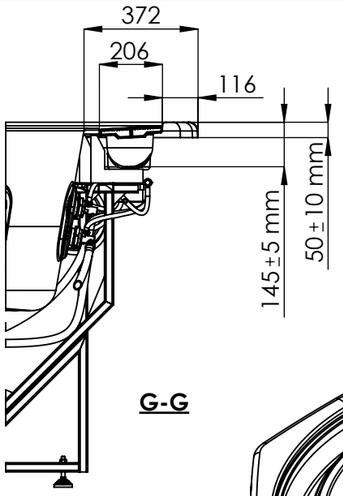

G-G

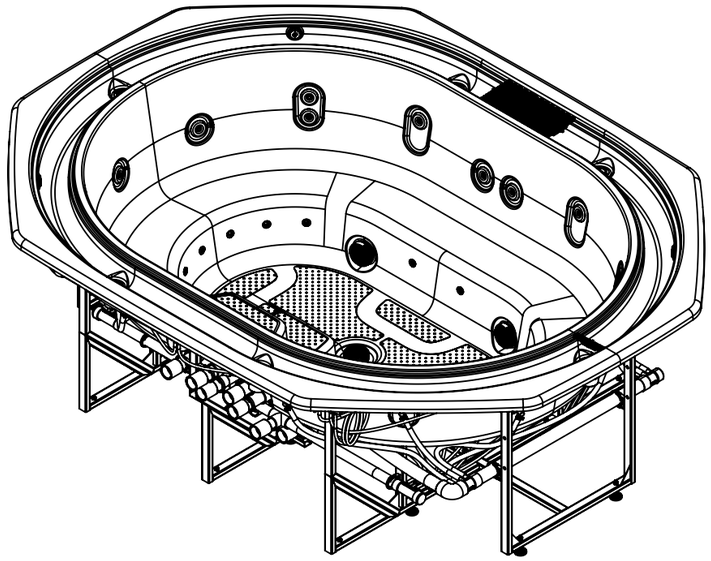

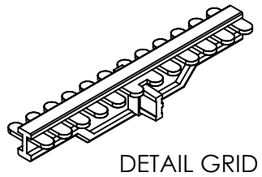

DETAIL GRID
SCALE 1:4

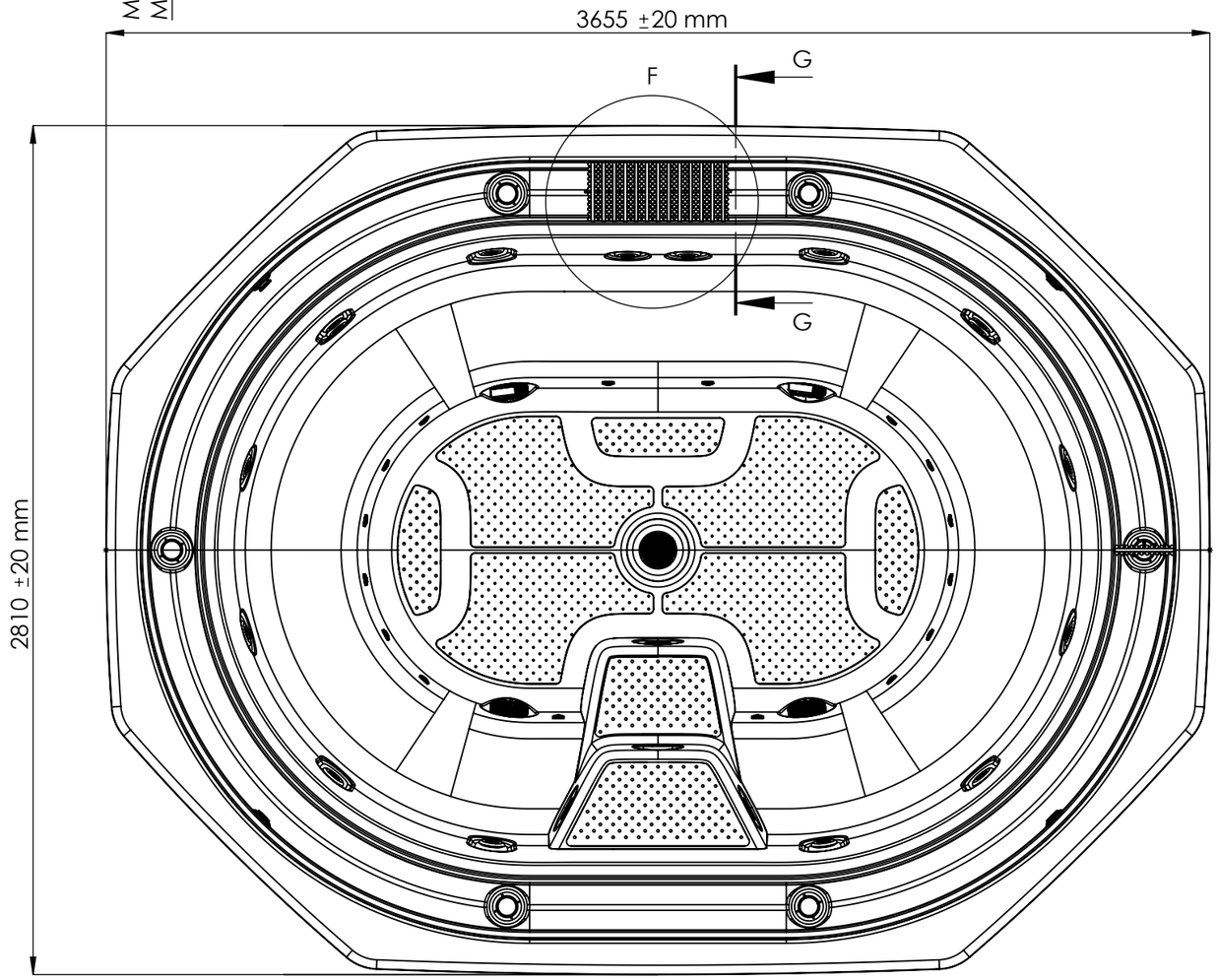

HYDRAULIC CONNECTIONS ACCESS

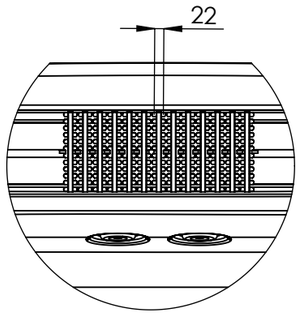

F (1 : 15)

According to our policy of continuous improvement, dimensions, features or components of this product can be partially or completely changedwithout prior notice.
It's Customer responsibility to verify that this is the last version of the drawing.

Revision *Revisión*	Date *Fecha*	Name *Nombre*	Modification *Modificación*

Dimensions in mm. General Tolerances +/- 10mm

COMMERCIAL PUBLIC RANGE

	Date	Name
Drawn	11/06/2020	C. F.
Checked	11/06/2020	Xavi Codina
Scale 1:20	General Tolerance DIN 7168 ISO 2768g	
Sheet 1/1		

iberspa

Code: 73588

Rev.: 00

Size A3

First Angle Projection

Property of IBERSPA S.L. Avda. Plà d'Urgell 2-8 25200 Cervera, Spain. Don't use without permission. Keep this information confidential and use it solely for the permitted purpose.

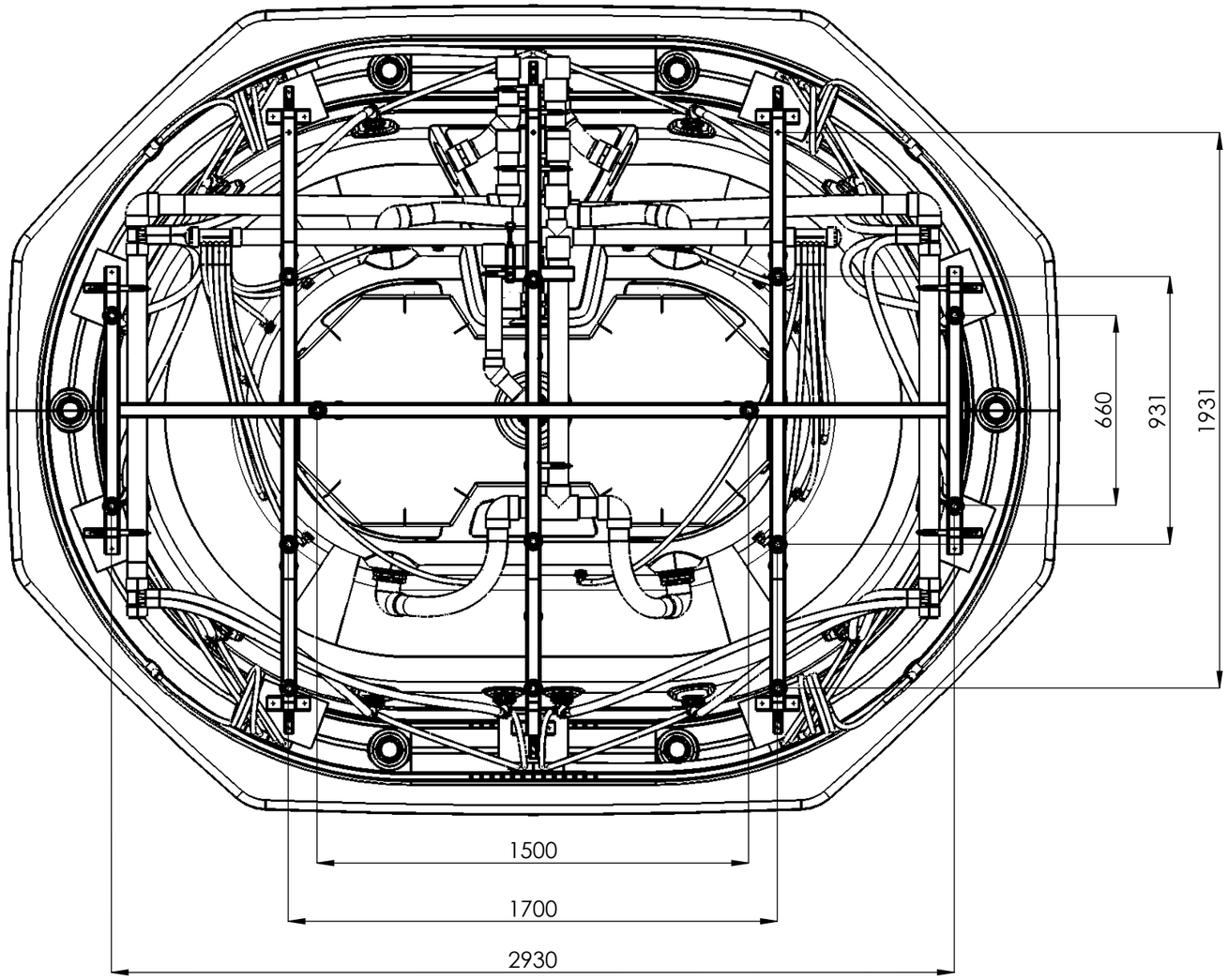

		73588
A	Suction-Water Massage Pump 1	∅63 FEMALE THREAD
B	Suction-Water Massage Pump 2	∅63 FEMALE THREAD
C	Return-Water Massage Pump 1	∅63 FEMALE THREAD
D	Return-Water Massage Pump 2	∅63 FEMALE THREAD
E	Return-Air Massage	∅63 FEMALE THREAD
F	Suction/Return-Filtration Pump Bottom Spa	∅63 FEMALE THREAD
G	Return-Filtration Pump Inlets (3x)	∅63 FEMALE THREAD
H	Overflow Drains	∅75 FEMALE THREAD
I	Light (Optional)	Optional

A (1 : 5)

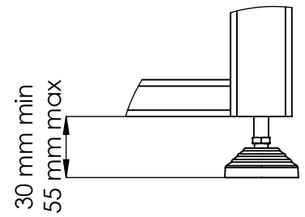

WARNING:
It's essential to keep a minimum clearance access of **700mm** all around. Minimum depth of spa hole **920** mm.

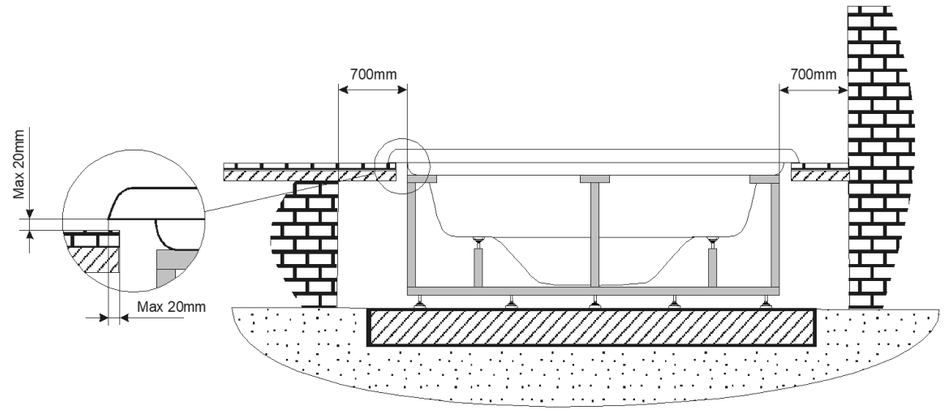

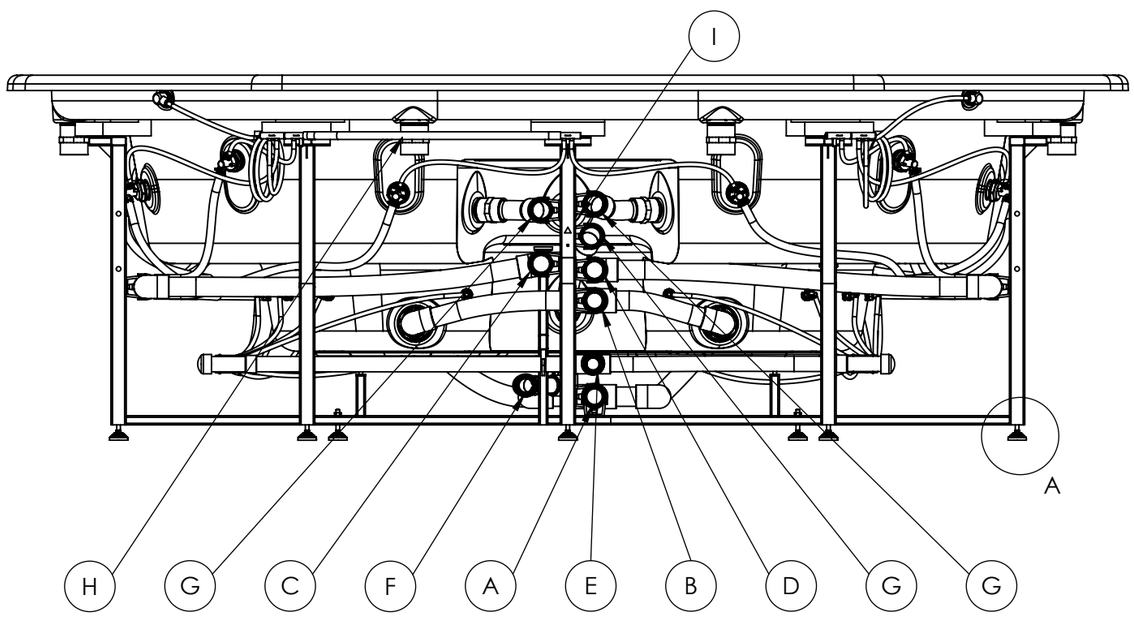

According to our policy of continuous improvement, dimensions, features or components of this product can be partially or completely changedwithout prior notice.
It's Customer responsibility to verify that this is the last version of the drawing.

Revision *Revisión*	Date *Fecha*	Name *Nombre*	Modification *Modificación*

Dimensions in mm. General Tolerances +/- 10mm

COMMERCIAL PUBLIC RANGE

	Date	Name
Drawn	11/06/2020	C. F.
Checked	11/06/2020	Xavi Codina
Scale 1:20	General Tolerance DIN 7168 ISO 2768g	
Sheet 1/1		

iberspa

Code: 73588

Rev.: 00

Size A3

First Angle Projection

Property of IBERSPA S.L. Avda. Plà d'Urgell 2-8 25200 Cervera, Spain. Don't use without permission. Keep this information confidential and use it solely for the permitted purpose.